# CURTIS SNO-PRO/HOME-PRO 3000 HARNESS LAYOUT

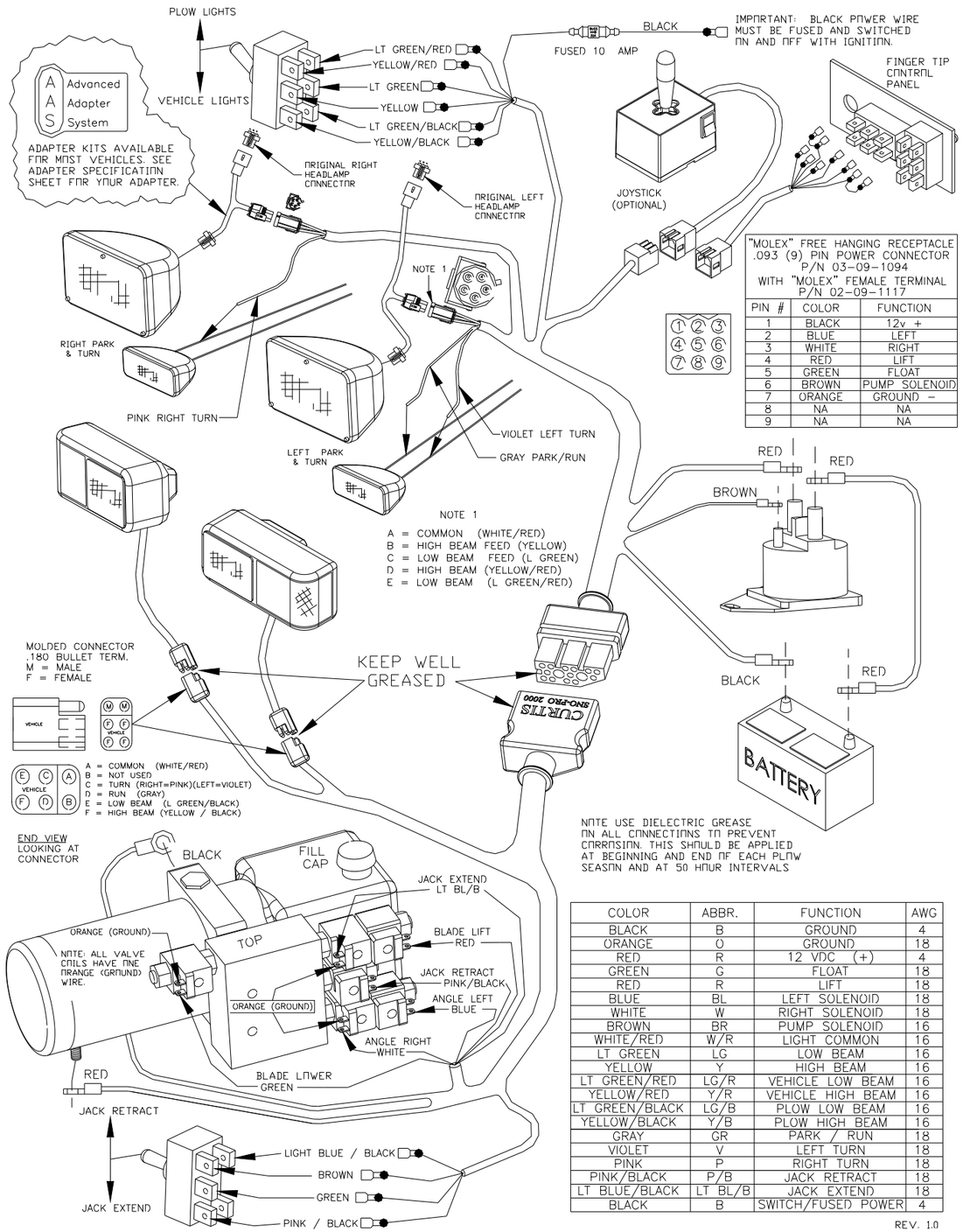


"MOLEX" FREE HANGING RECEPTACLE
.093 (9) PIN POWER CONNECTOR
P/N 03-09-1094
WITH "MOLEX" FEMALE TERMINAL
P/N 02-09-1117

| PIN # | COLOR | FUNCTION |
|---|---|---|
| 1 | BLACK | 12v + |
| 2 | BLUE | LEFT |
| 3 | WHITE | RIGHT |
| 4 | RED | LIFT |
| 5 | GREEN | FLOAT |
| 6 | BROWN | PUMP SOLENOID |
| 7 | ORANGE | GROUND – |
| 8 | NA | NA |
| 9 | NA | NA |

NOTE USE DIELECTRIC GREASE ON ALL CONNECTIONS TO PREVENT CORROSION. THIS SHOULD BE APPLIED AT BEGINNING AND END OF EACH PLOW SEASON AND AT 50 HOUR INTERVALS

| COLOR | ABBR. | FUNCTION | AWG |
|---|---|---|---|
| BLACK | B | GROUND | 4 |
| ORANGE | O | GROUND | 18 |
| RED | R | 12 VDC (+) | 4 |
| GREEN | G | FLOAT | 18 |
| RED | R | LIFT | 18 |
| BLUE | BL | LEFT SOLENOID | 18 |
| WHITE | W | RIGHT SOLENOID | 18 |
| BROWN | BR | PUMP SOLENOID | 16 |
| WHITE/RED | W/R | LIGHT COMMON | 16 |
| LT GREEN | LG | LOW BEAM | 16 |
| YELLOW | Y | HIGH BEAM | 16 |
| LT GREEN/RED | LG/R | VEHICLE LOW BEAM | 16 |
| YELLOW/RED | Y/R | VEHICLE HIGH BEAM | 16 |
| LT GREEN/BLACK | LG/B | PLOW LOW BEAM | 16 |
| YELLOW/BLACK | Y/B | PLOW HIGH BEAM | 16 |
| GRAY | GR | PARK / RUN | 18 |
| VIOLET | V | LEFT TURN | 18 |
| PINK | P | RIGHT TURN | 18 |
| PINK/BLACK | P/B | JACK RETRACT | 18 |
| LT BLUE/BLACK | LT BL/B | JACK EXTEND | 18 |
| BLACK | B | SWITCH/FUSED POWER | 4 |

REV. 1.0

# CURTIS SNO-PRO/HOME-PRO 3000 CONTROL DETAIL

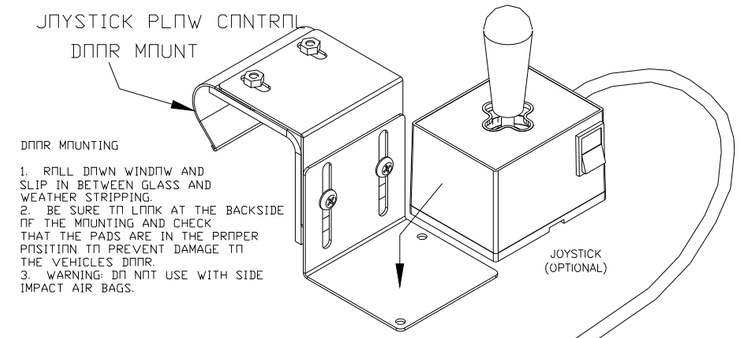


DOOR MOUNTING

1. ROLL DOWN WINDOW AND SLIP IN BETWEEN GLASS AND WEATHER STRIPPING.
2. BE SURE TO LOOK AT THE BACKSIDE OF THE MOUNTING AND CHECK THAT THE PADS ARE IN THE PROPER POSITION TO PREVENT DAMAGE TO THE VEHICLES DOOR.
3. WARNING: DO NOT USE WITH SIDE IMPACT AIR BAGS.

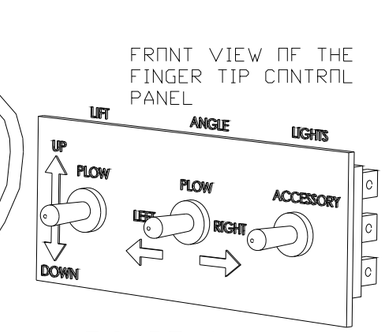


FIGURE 1

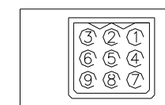

END VIEW
LOOKING AT CONNECTOR

"MOLEX" FREE HANGING PLUG
.093 (9) PIN POWER CONNECTOR
P/N 03-09-2092
WITH "MOLEX" MALE TERMINAL
P/N 02-09-2116

| PIN # | COLOR | FUNCTION |
|---|---|---|
| 1 | BLACK | 12v + |
| 2 | BLUE | LEFT |
| 3 | WHITE | RIGHT |
| 4 | RED | LIFT |
| 5 | GREEN | FLOAT |
| 6 | BROWN | PUMP SOLENOID |
| 7 | ORANGE | GROUND – |
| 8 | NA | NA |
| 9 | NA | NA |

REAR VIEW OF THE FINGER TIP CONTROL PANEL

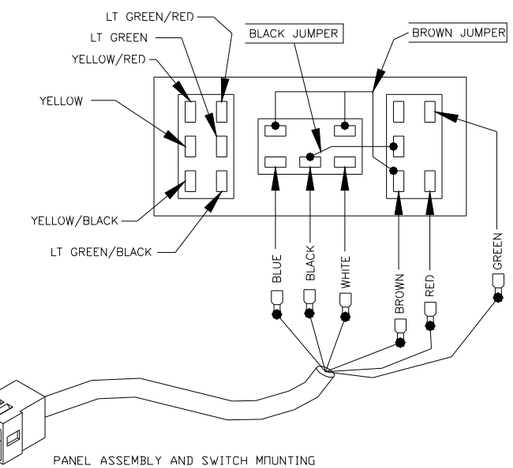

END VIEW
LOOKING AT CONNECTOR

"MOLEX" FREE HANGING RECEPTACLE
.093 (9) PIN POWER CONNECTOR
P/N 03-09-1094
WITH "MOLEX" FEMALE TERMINAL
P/N 02-09-1117

| PIN # | COLOR | FUNCTION |
|---|---|---|
| 1 | BLACK | 12v + |
| 2 | BLUE | LEFT |
| 3 | WHITE | RIGHT |
| 4 | RED | LIFT |
| 5 | GREEN | FLOAT |
| 6 | BROWN | PUMP SOLENOID |
| 7 | ORANGE | GROUND – |
| 8 | NA | NA |
| 9 | NA | NA |

PANEL ASSEMBLY AND SWITCH MOUNTING

1. REMOVE ALL OF THE COMPONENTS FOR THE SWITCH PANEL.
2. APPLY THE LABEL TO THE FRONT OF THE PANEL ORIENTED AS SHOWN IN FIGURE 1.
3. MOUNT THE YELLOW SWITCH IN THE UP/DOWN POSITION. MOUNT IT SO THE MOMENTARY CONTACT POSITION IS UP.
4. MOUNT THE BLACK SWITCH HORIZONTALLY REFERENCE THE REAR VIEW TO GET PROPER LEFT/RIGHT ORIENTATION.
5. MOUNT THE LIGHT SWITCH IN THE ACCESSORY POSITION.

WIRING THE PANEL

1. VIEWING THE PANEL FROM THE REAR CONNECT THE WIRES AT THE LOCATIONS INDICATED.
2. FOR THE JUMPER CABLES USE THE PIGGYBACK SPADE FITTINGS SUPPLIED THE JUMPER CABLES SHOULD BE THE SAME COLORS AS THE MAIN WIRE THEY ORIGINATE FROM.

PANEL MOUNTING

1. WE RECOMMEND A LOCATION CLOSE TO THE CENTER OF THE DASH UNDER THE ASH TRAY. MOUNT AWAY FROM ANY LOCATION DIRECTLY FORWARD OF THE DRIVER OR PASSENGERS SO THERE IS NO POSSIBILTY OF HITTING IT IN CASE OF A ACCIDENT. BE SURE TO LOOK AT THE BACKSIDE OF ANY LOCATION THAT MAY BE USED. CHECK FOR WIRING, AIR BAGS, OR ANY OTHER SUCH INTERFERENCE.

REV. 1.0